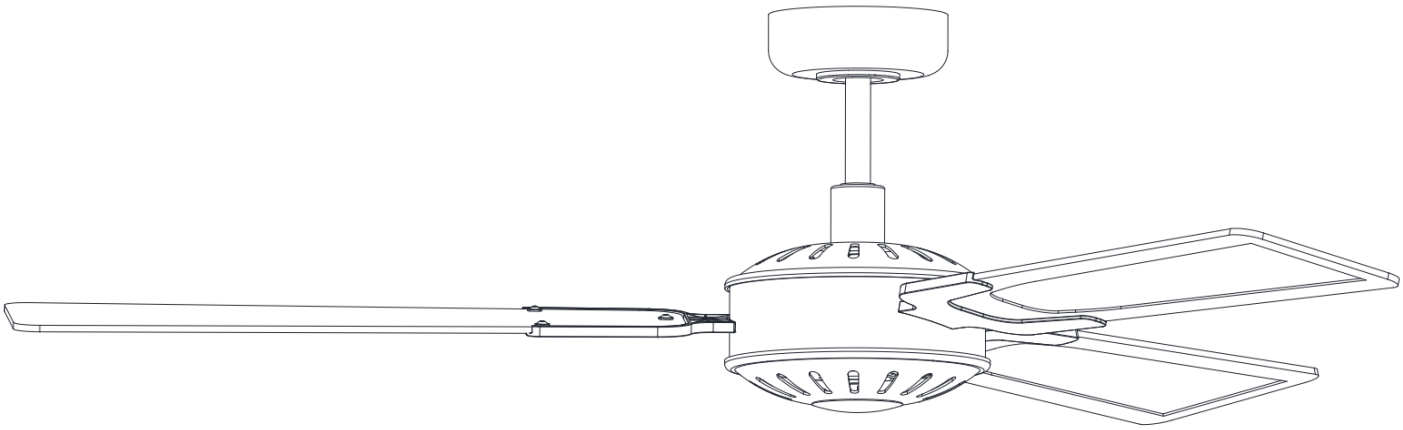

LUCCI AIR

CAROLINA II

DC CEILING FAN

- INSTALLATION
- OPERATION
- MAINTENANCE
- WARRANTY INFORMATION

CAUTION

READ INSTRUCTIONS CAREFULLY FOR SAFE INSTALLATION AND FAN OPERATION.

v1.1- AU (10/2026)

THANK YOU FOR PURCHASING

Thank you for purchasing the latest in energy saving ceiling fans. This fan runs on DC (direct current) power which gives it the benefit of being super energy efficient whilst still maintaining high volume air-movement and silent operation.

Energy saving - The DC motor is the latest technology in fan design. Its highly efficient motor saves up to 65% more energy than ceiling fans with traditional AC motors.

Silent operation – This DC fan motor is programmed with a stabilised current which efficiently reduces motor noise.

Low operating temperature – The DC power is managed effectively which brings down the motor operating temperature to less than 50℃. This results in a much cooler motor than a standard AC fan and increases the longevity of the motor.

6 speed remote control - Regular AC ceiling fans usually come with only 3 speeds, this DC fan comes complete with a 6 speed remote, which gives a greater choice of comfort levels.

SAFETY PRECAUTIONS

1. The appliance is not intended for use by persons (including children) with reduced physical, sensory or mental capabilities, or lack of experience and knowledge, unless they have been given supervision or instruction concerning the use of the appliance by a person responsible for their safety.
2. Children should be supervised to ensure that they do not play with the appliance.
3. An all-pole disconnection switch must be incorporated into the fixed wiring, in accordance with local wiring rules.

WARNING:

FOR SAFE USE OF THIS FAN AN ALL-POLE DISCONNECTION MUST BE INCORPORATED INTO THE FIXED WIRING IN ACCORDANCE WITH THE WIRING RULES.

As outline in clause 7.12.2 of AS/NZS 60335-1 for meeting the minimum electrical safety of this standard.

Please note warranty will be void if installation is without a means for an all-pole disconnection incorporated in the fixed wiring in accordance with the wiring rules.

This fan is suitable for indoor use only.

Example: If a fan is connected to a circuit that can be isolated via an all-pole safety switch at the switchboard, then this is considered to be an all-pole disconnection to the ceiling fan electrical circuit, meeting the requirements of clause 7.12.2 of AS/NZS 60335.1.

A single-pole switch on the active of the receiver input of remote control must also be included in the wiring, and located the same room as the ceiling fan.

4. The structure to which the fan is to be mounted must be capable of supporting a weight of 22kg.
5. The fan should be mounted so that the blades are more than 2.1m above the floor.
6. This fan is suitable for indoor use only. Mounting the fan in a location where it is subject to water or moisture is dangerous and may increase the risk of damage, injury or electrical shock and will void the warranty.
7. Must be assembled and installed by a licensed electrician.
8. **WARNING:** If unusual wobbling or oscillating movement is observed, immediately stop using the ceiling fan and contact the manufacturer, its service agent or suitably qualified persons.
9. The replacement of parts of the safety suspension system device shall be performed by the manufacturer, its service agent or suitably qualified persons.
10. The fixing means for attachment to the ceiling such as hooks or other devices shall be fixed with a sufficient strength to withstand 4 times the weight of the ceiling fan; that the mounting of the suspension system shall be performed by the manufacturer, its service agent or suitably qualified persons.
11. This remote contains battery that is non-replaceable.
12. The remote control can only be powered at a safe extra low voltage (DC 5 V).

This fan is suitable for indoor use only.

PARTS LIST

- Unpack your ceiling fan carefully. Remove all parts and hardware.
- Lay out all the components on a smooth non-scratch surface and make sure there are no components missing before assembling. If parts are missing, return the complete product to the place of purchase for inspection or replacement.
- Check whether the ceiling fan has been damaged during transport. Do not operate/install any product which appears damaged in any way. Return the complete product to the place of purchase for inspection, repair or replacement.
- Examine all parts, you should have the following:

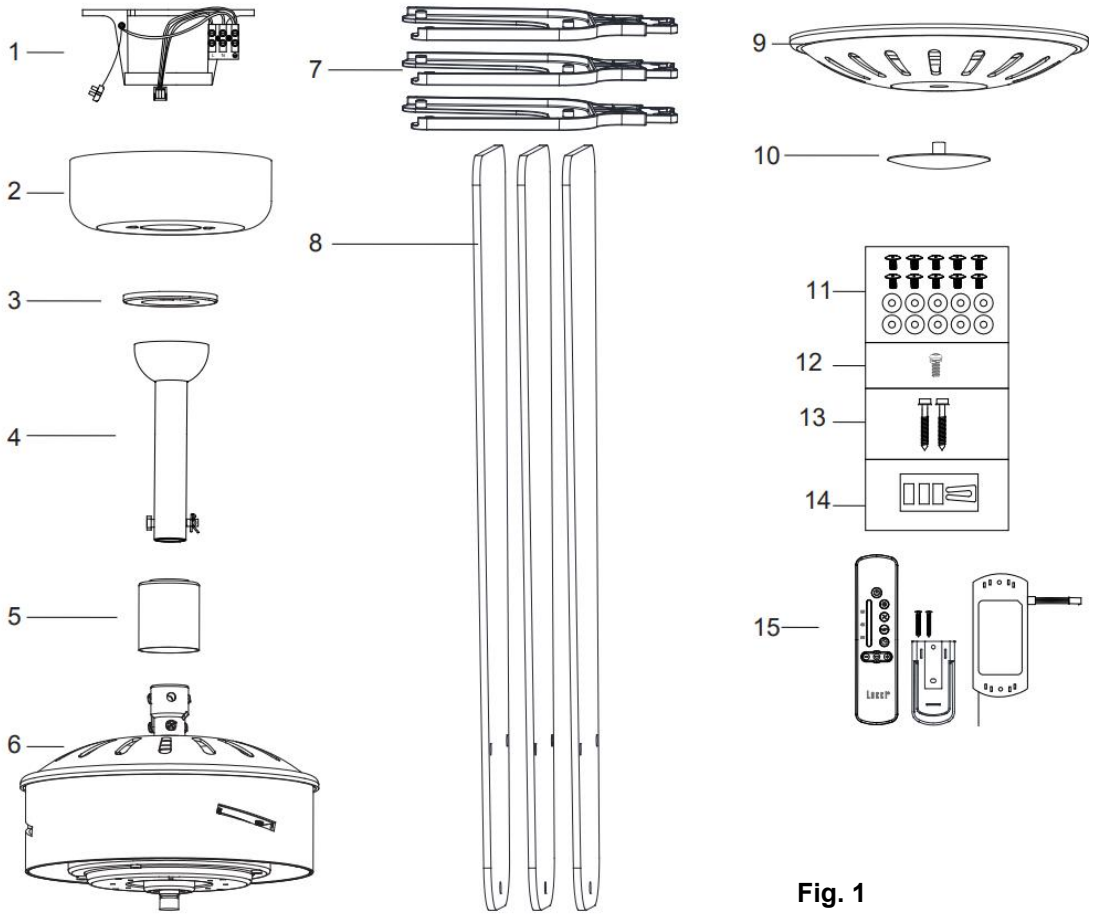

Fig. 1

1.	Mounting bracket x 1	9.	Lower housing x 1
2.	Canopy x 1	10.	Finial cap x 1
3.	Canopy cover x 1	11.	Blade screws & washers x 9 (and 1 spare)
4.	Downrod and Ball Joint x 1	12.	Blade bracket screw x 1 (spare)
5.	Decorative cover x 1	13.	Mounting bracket screws x 2
6.	Fan assembly x 1 set	14.	Balance kit x 1 set (P210215)
7.	Fan blade brackets x 3	15.	Remote controller (P210127, includes 2 x screws; 1 x holder) & Receiver x 1 set (P210162)
8.	Blades x 3 pcs (P210165, P210166, P210167)		

INDOOR ONLY

This fan is suitable for indoor use only.

INSTALLING THE FAN

TOOLS REQUIRED:

- Phillips / flat head screwdriver
- Pair of pliers
- Adjustable spanner
- Step ladder
- Wire cutter
- Wiring, supply cable as required by local provincial and national wiring codes and regulations

INSTALLING THE MOUNTING BRACKET

- The ceiling fan must be installed in a location so that the blades are spaced 300mm from the tip of the blade to the nearest objects or walls.
- Install the hanging bracket to the ceiling joist or structure that is capable of carrying a load of at least 22kg, with two long screws provided. Ensure at least 30mm of the screw is threaded into the support. (Fig. 2)

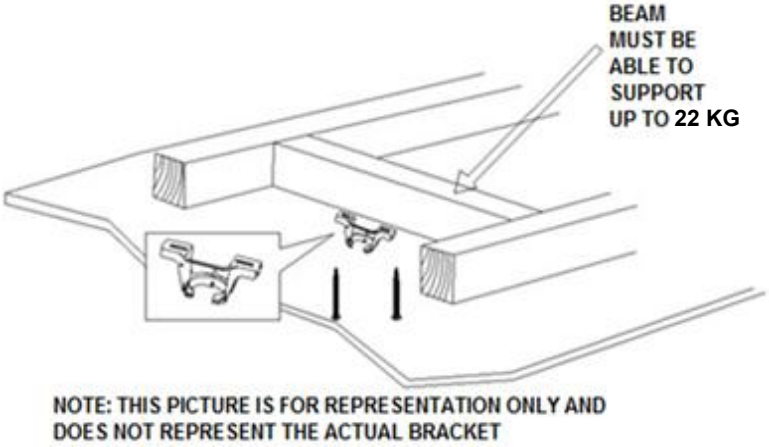

Fig. 2

NOTE: The bracket screws provided are for use with wooden structures only. For structures other than wood, the appropriate screw type MUST be used. Ensure the screws used are suitable for the mounting surface and the surrounding environment.

ANGLED CEILING INSTALLATION

This fan hanging system supports a maximum 13 degree angled ceiling installation. (Fig. 3)

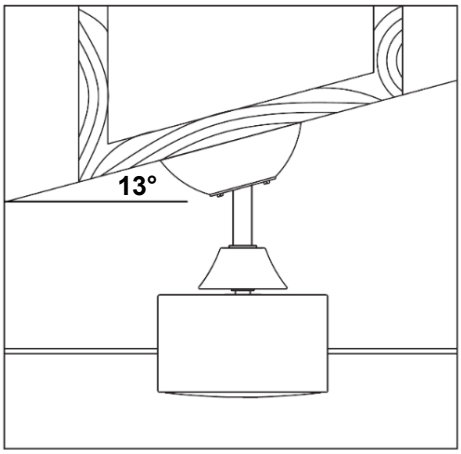

Fig. 3

INDOOR ONLY

This fan is suitable for indoor use only.

INSTALLING THE FAN

INSTALLING THE DOWN ROD

1. Remove the ball joint (2) and dowel pin (3) by loosening the set screws (4) from the down rod (6). Remove the hitch pin (9) by removing the lock clip (10) (Fig. 4.1).

NOTE: Do not discard these parts, they are required to reassemble later.

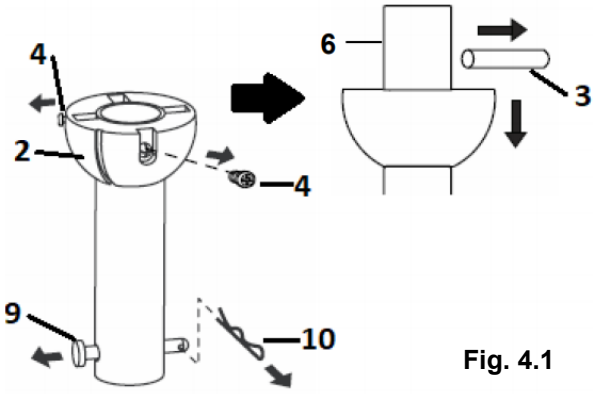

Fig. 4.1

2. Loosen the set screws (11) on the down rod coupling housing (8). (Fig. 4.2)
3. Carefully feed the fan wires (1) up through the down rod (6). (fig. 4.3)
4. Assemble the down rod (6) into the down rod coupling housing (8), by inserting and line up the down rod coupling housing holes with the down rod holes and insert the hitch pin (9) and secure with the lock clip (10). (Fig. 4.3)
5. Secure the down rod (6) by tightening the set screws (11). (Fig. 4.4)

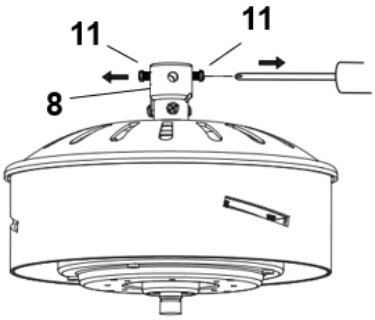

Fig. 4.2

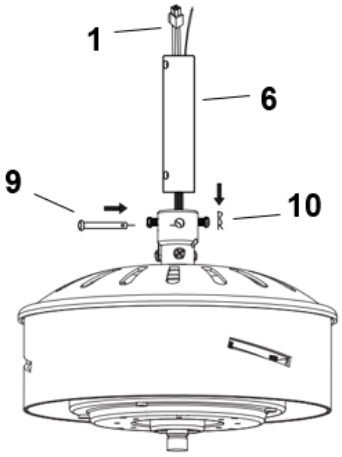

Fig. 4.3

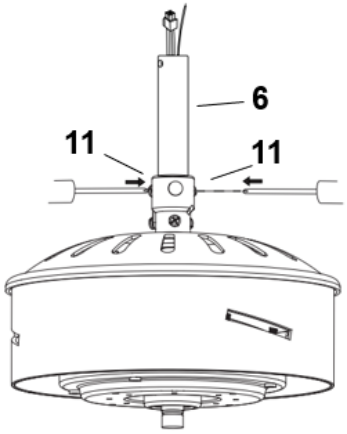

Fig. 4.4

This fan is suitable for indoor use only.

6. Insert the decorative cover (7) onto the down rod (6) to cover the down rod coupling housing (8). (Fig. 4.5)
7. Insert the canopy (5) & canopy cover (12) over the down rod (6) and install the ball joint (2) and dowel pin (3) back onto the down rod (6) and secure by tightening the set screws (4). (Fig. 4.5 and Fig. 4.6)

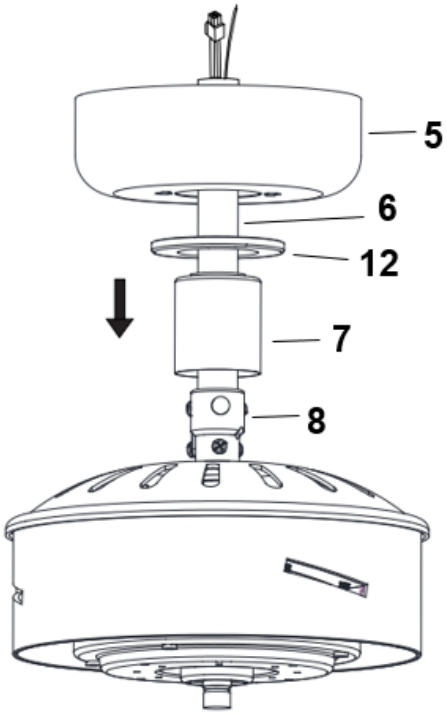

Fig. 4.5

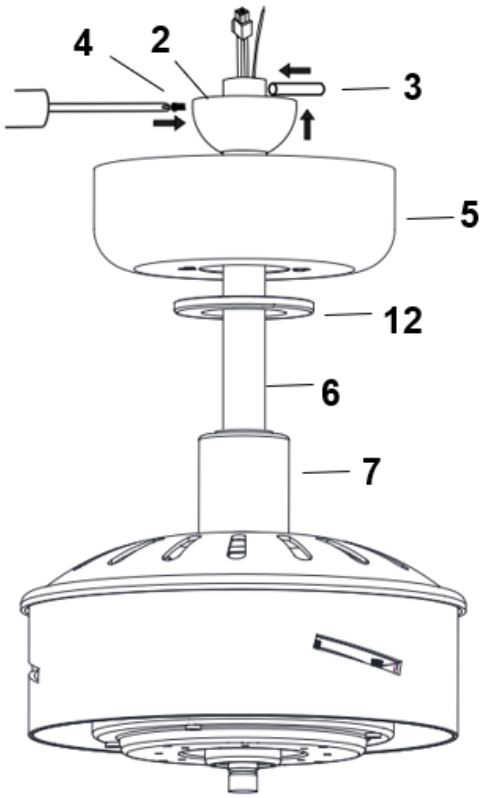

Fig. 4.6

HANGING THE FAN

Lift the fan assembly onto the mounting bracket. Ensure the registration slot (A) of the hanger ball is positioned on the stopper (B) of the mounting bracket (C) to prevent the fan from rotating when in operation. (Fig.5)

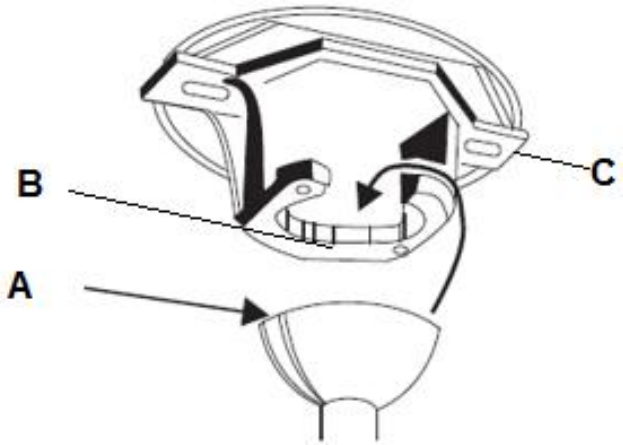

Fig. 5

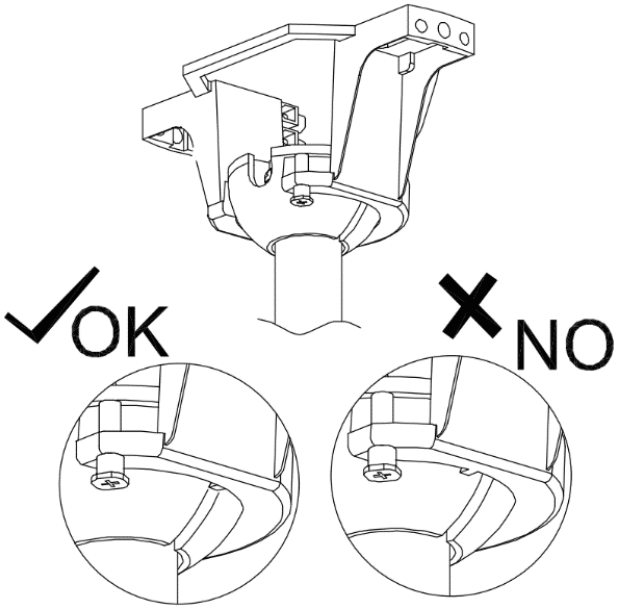

This fan is suitable for indoor use only.

INSTALLATION OF BLADE

1. Assemble the fan blade to the fan blade bracket by tightening the 3 blade screws and lock washers & flat washers.
   Take note that the correct side of the blades with the marking "THIS SIDE UP" is on the screw head side. (Fig. 6)

Fig. 6

2. Before installing the blade assembly, remove the motor blade bracket screws from the bottom of the fan motor assembly. (Fig. 7)
3. Insert the blade assembly into the slot of the rotating member of the fan motor assembly. (Fig. 8)
4. Align and engage the holes of the blade bracket to the fan motor assembly. (Fig. 8)
5. Secure the blade bracket to the fan motor assembly by tightening the 2 blade bracket screws. (Fig. 8)
   Ensure all screws are tightened evenly to reduce the chance of warping or unbalancing.
   Take care not to over-tighten the screws, as this can damage the blades

Take note that the correct side of the blades with the marking "THIS SIDE UP" faces the ceiling.

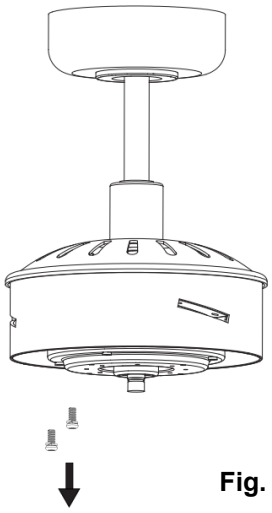

Fig. 7

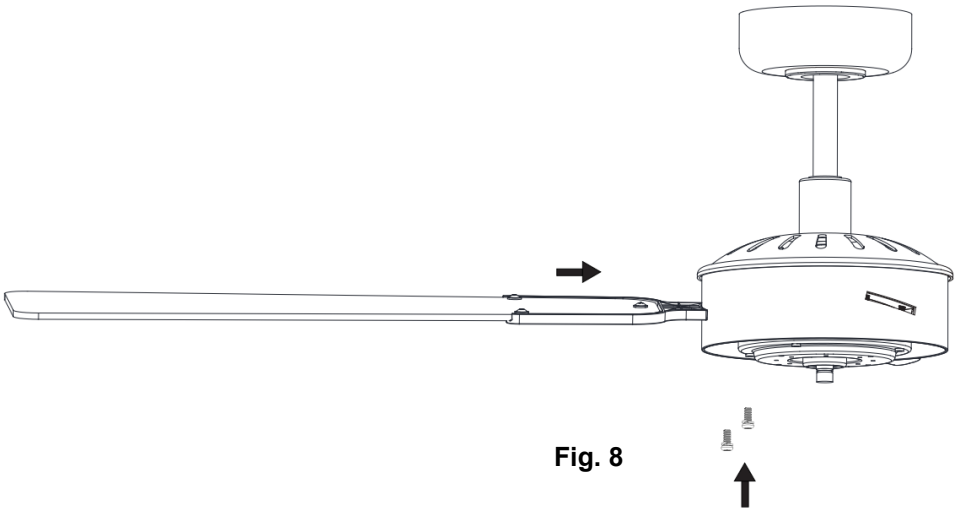

Fig. 8

6. Repeat the same process for the other blade assemblies.

This fan is suitable for indoor use only.

INSTALLATION OF LOWER HOUSING

- Install the lower housing on the fan assembly and secure it by tightening the finial cap on the bottom. (Fig. 9)

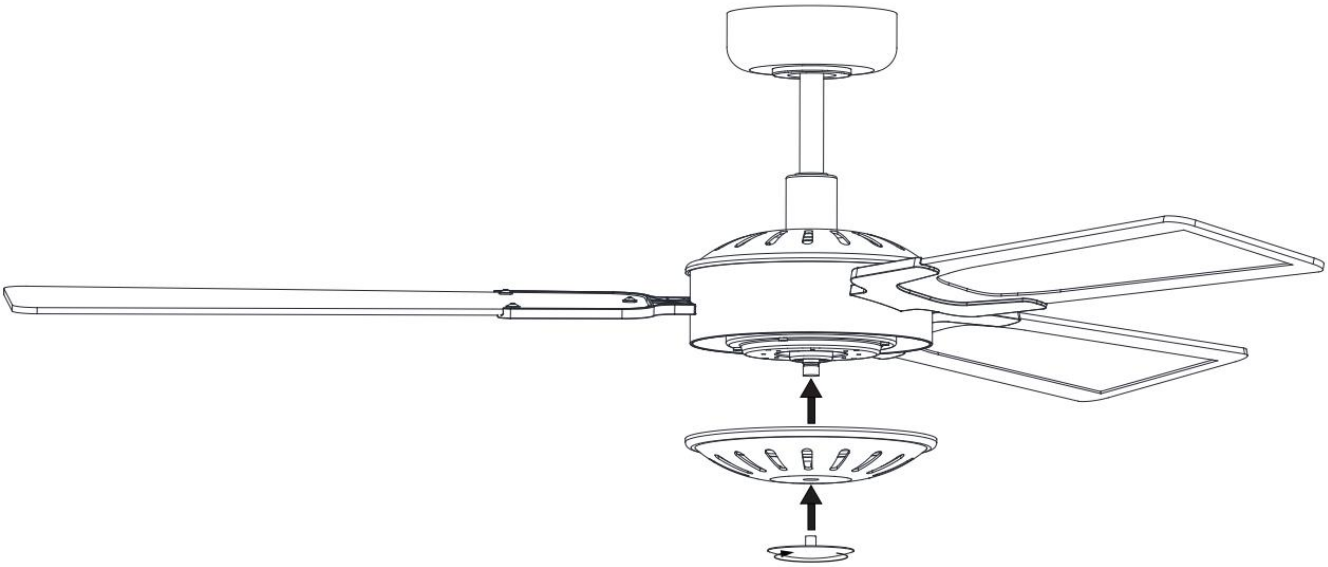

Fig. 9

ELECTRICAL WIRING DIAGRAM THE FAN

PREPARE AND COMPLETE THE ELECTRICAL WIRING --- WIRING DIAGRAM (FIG. 10)

WARNING: FOR YOUR SAFETY ALL ELECTRICAL CONNECTIONS MUST BE UNDERTAKEN BY A LICENSED ELECTRICIAN.

NOTE: AN ADDITIONAL ALL POLE DISCONNECTION SWITCH MUST BE INCLUDED IN THE FIXED WIRING.

NOTE: IF THERE ARE TWO OR MORE DC CEILING FANS INSTALLED IN THE ONE LOCATION, AN ISOLATION SWITCH IS REQUIRED FOR EACH CEILING FAN. THIS IS REQUIRED WHEN PROGRAMMING THE REMOTE AND RECEIVER TO PAIR TOGETHER.

NOTE: Ensure the motor earth wire is connected to the single earthing terminal block "1" in the diagram below (Fig. 10).

From mains supply to mounting bracket terminal block: (Fig. 10)

1. Connect the live supply wire to the "L" terminal of the terminal block on the mounting bracket.
2. Connect the neutral supply wire to "N" terminal of the terminal block on the mounting bracket.
3. Connect the earth wire to the earth terminal of the terminal block on the mounting bracket.

From mounting bracket to receiver and motor: (Fig. 10)

4. Connect the supply wiring from the mounting bracket to the input of the DC motor receiver.
5. Connect the output wires of the DC motor receiver to the input wires of the fan motor
6. Connect the earth wire from fan motor assembly to the single earthing terminal block "1" in the diagram below.

INDOOR ONLY
This fan is suitable for indoor use only.

MOUNTING BRACKET

L N

Earth

N(Fan and Light Neutral)

L(Fan Live)

1

Earthing teminal

Remote Receiver

Fan assembly earth wire

FAN ASSEMBLY

Fig. 10

Carefully insert the Remote Receiver above the hanger ball in the remainder spacing in the mounting bracket. Take care not to damage or loosen any of the wiring. (Fig. 11).

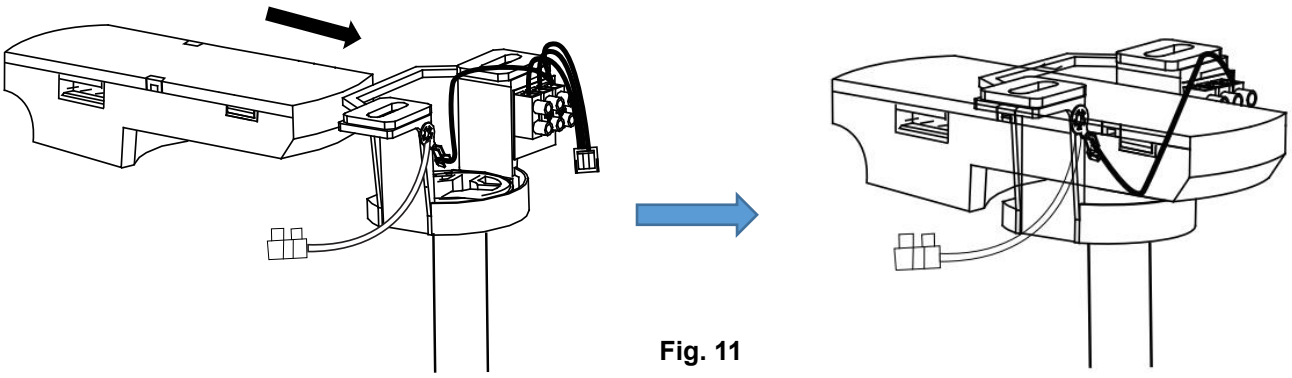

Fig. 11

INDOOR ONLY

This fan is suitable for indoor use only.

FINISHING THE INSTALLATION

- After completing the electrical connection at the mounting bracket terminal block, connect the ceiling fan wiring via the quick connector plug.

NOTE: Ensure the earth wiring is secure and correct by performing an earth continuity test from the fan's accessible metal body back to the earth terminal at the terminal block on the mounting bracket.

INSTALLATION OF THE CANOPY (Fig. 12)

1. Loosen the 2 screws at the bottom of the mounting bracket.
2. Slide the canopy up to the mounting bracket and align the key holes on the canopy with the screws on the mounting bracket. Turn the canopy until it locks into place with the narrow section of the key holes, and secure it by tightening the two screws. Avoid damaging the electrical wiring prepared previously.
3. Slide the canopy cover ring up to the canopy and click in to cover the canopy cover screws.

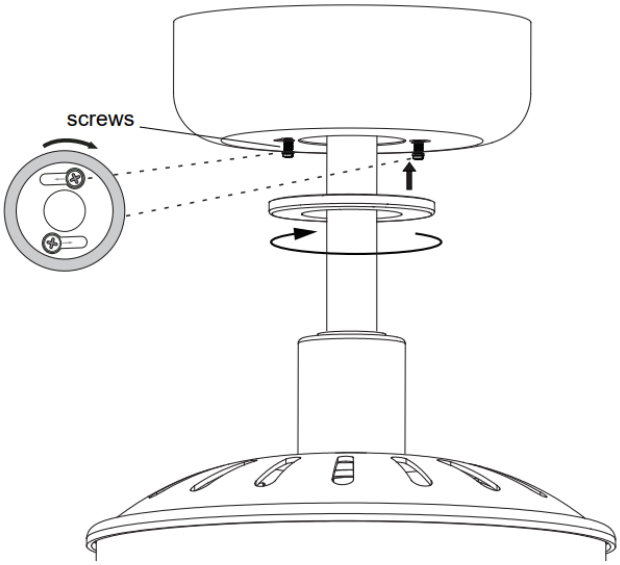

Fig. 12

INSTALLING THE TRANSMITTER HOLDER (Fig.13)

4. Locate a suitable wall to fix the remote control holder with the 2 screws. (Fig.13a).
5. Slide the remote into the holder to rest the remote. (Fig. 13b)

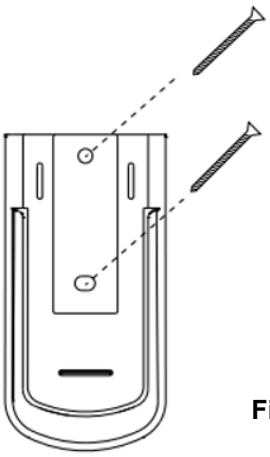

Fig. 13a

Fig. 13b

This fan is suitable for indoor use only.

USING YOUR CEILING FAN

REMOTE CONTROL

1. Test the remote by pressing and holding any button. The LED will be lit up green on the remote to indicate that there is power to the remote and it is ready for use to control the fan.
2. Follow the guide below to operate the fan and learn the functions.

USB TYPE -C
Charging port

: Fan Off Button

Press the button to turn the fan off

: **Fan Increase Speed Button**

Press the button to increase the fan speed, the fan has a total 6 speeds.

: **Fan Decrease Speed Button**

Press the button to decrease the fan speed, the fan has a total 6 speeds.

: **Reverse Function Button**

Press the button to activate the reverse running function.
The fan must be operating to activate the reverse function.

: **Timing control of the fan and light**
(2 hour, 4 hours, 8 hours)

When the fan/light is working, press the button to activate the timer function and increase or decrease the time setting: 2 hours, 4 hours or 8 hours. The fan/light will turn off after the set time.

: *** Light On /Off Button**

Press the button to turn the light on /off

: *** Light brightness increase button**

: * Light brightness decrease button

*The Carolina II fan is without light

TYPE C USB charging port: When charging, the LED red light on the remote will always be on to indicate the battery is charging until the battery is full. The LED red light on the remote will turn off after the battery is full.

NOTE: If the battery is low, when pressing any buttons on the remote, the LED red light on the remote will flash 10 times in 3 seconds.

The remote has a memory function. If the fan is turned off by the isolating switch for over 7 seconds, the next time the fan is turned on, it will be on the last setting

THE FAN RECEIVER & REMOTE PAIRING

NOTE: This remote is supplied with default coding, the fan can be used without further pairing.
When the ceiling fan is installed, pairing the fan receiver and remote is NOT required.

INDOOR ONLY

This fan is suitable for indoor use only.

REPAIRING THE FAN RECEIVER & REMOTE PAIRING

Note: The remote and receiver have already been paired during manufacturing. The following steps are only necessary if the remote and fan become unpaired or if you need to pair multiple fans.
When operating this pairing function, please stand within 3 meters of the fan.

PAIRING REMOTE & RECEIVER – WHEN 1 DC CEILING FAN IS INSTALLED IN ONE LOCATION

NOTE: Ensure that you have installed a single pole disconnection switch in the fixed wiring for the fan.
NOTE: Ensure power to the receiver is ON prior to pairing the remote with the receiver.

- Turn OFF the mains supply to the fan by the on/off wall switch for 30 seconds.
- Turn ON the power to the receiver.
- Press and hold the ⏻ button on the remote for 5 seconds within 30 seconds of switching the power ON to the receiver of the ceiling fan.
  The LED on the remote will flash rapidly to indicate that the pairing process is successful.
- Turn ON the fan and change the speed of the ceiling fan via the remote to check the operation and successful pairing.
- If pairing has been unsuccessful, repeat this set of steps again.

PAIRING REMOTE AND RECEIVER – WHEN 2 OR MORE DC CEILING FANS ARE INSTALLED IN ONE LOCATION

NOTE: Ensure that you have installed a single pole disconnection switch in the fixed wiring for each fan.

- If you want to control 2 or more ceiling fans with one remote, do as explained in the normal pairing process, but make sure all the ceiling fans' wall switches are turned ON.

- If you want to control them with individual remotes, do as explained in the normal pairing process, but make sure the other ceiling fans' wall switches are turned OFF. After the first fan is paired, turn the wall switch OFF and continue the normal pairing process with the next fan.

RESET TO DEFAULT FOR THE REMOTE CONTROL:

Press and hold the ⏻ button on the remote for 15 seconds within 30 seconds of switching the power ON to the receiver of the ceiling fan. When it exceeds 5 seconds, the LED on the remote will flash rapidly for pairing. Keep pressing the button until it exceeds 15 seconds, the LED on the remote will flash rapidly again, and the receiver will return to the default factory setting.
After resetting, the fan receivers will return to default mode and can be controlled by all remotes.
Note: When operating this reset function, please stand within 3 meters of the fan.

WITH WIFI FUNCTION

NOTE: The fan has a Wi-Fi function. If you don't want to control the fan with the remote, you can also use the Wifi function to control your fan.
Install the WIFI Module (SKU#216180, not included – sold separately) onto the fan remote receiver.
Switch on the power, then set up the wireless & in-app control according to the 'LUCCI CONNECT user guide'

INDOOR ONLY

This fan is suitable for indoor use only.

RESET OF WIFI MODULE :

There are 2 systems for this remote, please try option A) first, if the fan doesn't beep, please try option B).

Option A: press and hold the " − " button and the " + " button, when the fan beeps, release it.

Option B: press and hold the timer " " button, when the fan beeps, release it.

Note: when operating this reset function, please stand within 3 meters of the fan.

Option A

Option B

**** When pairing, please follow the instruction on Lucci Connect APP**

REVERSE FUNCTION

Your ceiling fan can operate either in fan (summer) mode or reverse fan (winter) mode. Use the " " button on the remote to switch between summer and winter mode.

Summer mode: The fan will rotate in an anticlockwise direction. The airflow will be directed downwards for cooling in summer.

Winter mode: The fan will rotate in a clockwise direction. The airflow will be directed upwards, for energy conservation, ensuring an even temperature throughout your room during winter.

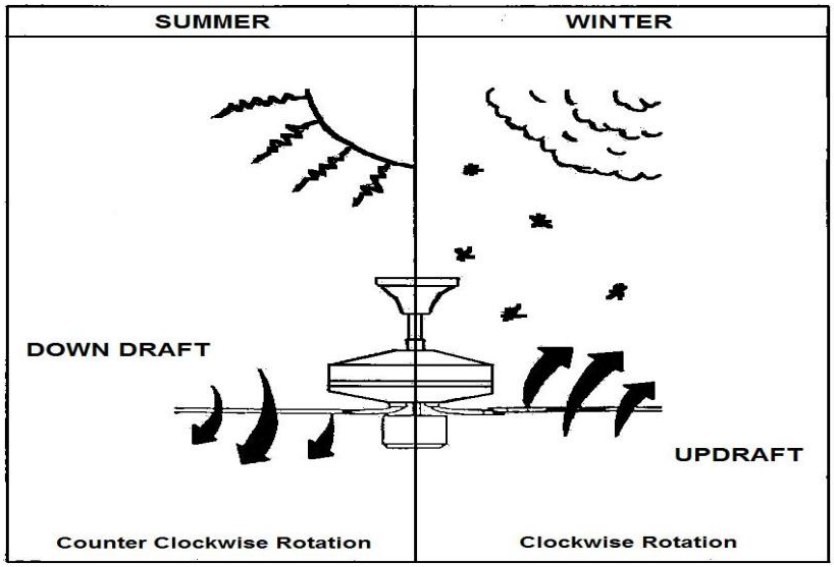

INDOOR ONLY

This fan is suitable for indoor use only.

REPAIRING THE FAN RECEIVER & REMOTE PAIRING

Should the remote and receiver lose control after installation or during use, the pairing of the remote and the receiver must be repaired. Below are the operating symptoms and the method to repair the pairing of the DC ceiling fan remote and receiver.

Symptoms:

- Loss of control - Fan is only running at high speed after installation
- Loss of control - No reverse function after installation
- Loss of control - Remote cannot communicate with the receiver

Repairing Steps:

- Switch OFF the main power to the ceiling fan for 30 seconds.
- Switch ON the main power of the ceiling fan. Follow the same process as described in the 'Pairing remote & receiver' section to repair the pairing.
- Turn on and select the different speeds of the ceiling fan to check the operation of the fan.

AFTER INSTALLATION

WOBBLE:

NOTE: Ceiling fans tend to move during operation due to the fact that they are mounted on a rubber grommet. If the fan was mounted rigidly to the ceiling it would cause excessive vibration. Movement of a few centimetres is quite acceptable and DOES NOT suggest any problem.

TO REDUCE THE FAN WOBBLE: Please check that all screws which fix the mounting bracket and down rod are secure.

BALANCING KIT: A balancing kit is provided to balance the ceiling fan on initial installation. Please refer to the instruction on how to use the balancing kit. The balancing kit can be used to assist re-balancing should the ceiling fan become un-balanced again. Store your balancing kit away after installation for future use if required.

NOISE:

When it is quiet (especially at night) you may hear occasional small noises. Slight power fluctuations and frequency signals superimposed in the electricity for off-peak hot water control, may cause a change in fan motor noise. This is normal. Please allow a 24-hour "breaking-in" period, most noises associated with a new fan disappear during this time. All electric motors are audible to some extent. Please note that this is not a product fault, and as such is not covered under warranty.

INDOOR ONLY

This fan is suitable for indoor use only.

CARE & CLEANING

NOTE: Always turn OFF the power at the mains switch before performing any maintenance or attempting to clean your fan.

- Every 6 months periodic cleaning of your ceiling fan is the only maintenance required. Use a soft brush or lint free cloth to avoid scratching the paint finish. Please turn off electricity power when you do so.
- Do not soak or immerse your ceiling fan in the water or other liquids. It could damage the motor or the blades and create the possibility of an electrical shock.
- Ensure that the fan does not come in contact with any organic solvents or cleaners.
- To clean the fan blade, wipe with only a damp clean cloth with NO organic solvents or cleaners.
- The motor has a permanently lubricated ball bearing so there is no need to oil.
- This remote contains a rechargeable Li-ion battery that is non-replaceable.

TECHNICAL INFORMATION

Fan	56” CAROLINA II DC FAN		
Fan Models	SKU# 211029	SKU# 211030	SKU# 211031
Rated Voltage	220-240V~ 50Hz		
Rated Wattage (Motor)	40W		
Rated wattage (Lamp)	N/A		
Battery for remote	Rechargeable Li-ion battery (Non-replaceable, USB-C charging)		
Weight	5.3 kg		
Canopy Dimensions	H:51.5mm Dia:150mm		

This fan is suitable for indoor use only.

LUCCI CEILING FAN WARRANTY DETAIL

LUCCI FAN WARRANTY CONTACT INFORMATION:

Online Warranty Form: https://www.beaconlighting.com.au/warranty-claims
Email: warranty@beaconlighting.com.au
Lucci Fan Warranty Hotline: (Free Call) 1800 602 243

THIS WARRANTY IS VALID IN AUSTRALIA ONLY

In the event of service being required, please call the Lucci Fan Warranty Hotline on 1800 602 243 between 9am & 5pm (EST) Monday to Friday. Please make sure you have all the ceiling fan details filled out at the end of the manual before making the call.

Every Lucci ceiling fan is thoroughly inspected and tested before being released for sale. In addition to any warranty rights or conditions under statutory regulations, Lucci warrants all its ceiling fans against defective workmanship and faulty materials for two (2) years from the date of purchase. Following this, an additional seven (7) years motor replacement warranty applies. Lucci undertakes, at its option, to repair or replace, free of charge, each product or part thereof on condition that;

1. The fan or relevant part has not been subjected to misuse, neglect, or been involved in an accident.
2. The repairs are not required as a result of normal wear and tear.
3. The product was installed by a licensed electrical contractor.
4. A copy of the original receipt of purchase is presented.
5. 12 month warranty applies when used in any non-domestic applications.
6. This warranty does not cover stains, scratch and scuff marks, or dents if the product is purchased through a factory outlet or to refurbished items.

Our goods come with guarantees that cannot be excluded under the Australian Consumer Law. You are entitled to a replacement or refund for a major failure and compensation for any other reasonably foreseeable loss or damage. You are also entitled to have the goods repaired or replaced if the goods fail to be of acceptable quality and the failure does not amount to a major failure.

Lucci Design cannot be held responsible for any repair other than those carried out by it or one of its Authorised Service Agents. Please keep this warranty information in a safe place. This information must be produced in the event of service being required.

Distributed by:
Beacon Lighting
140 Fulton Drive
Derrimut, Victoria, 3026, Australia
Ph +613 9368 1000
Email: warranty@beaconlighting.com.au

This fan is suitable for indoor use only.

CEILING FAN WARRANTY INFORMATION

LUCCI FAN WARRANTY CONTACT INFORMATION:

Online Warranty Form: https://www.beaconlighting.com.au/warranty-claims

Email: warranty@beaconlighting.com.au

Lucci Fan Warranty Hotline: (Free Call) 1800 602 243

Complete and retain this form for your personal records and warranty purposes.

NAME……..…

ADDRESS……..……

……POSTCODE……

MODEL NUMBER……..…

(PO# + DATECODE Sticker here)

PO NUMBER or DATECODE …….

DATE OF PURCHASE……..…

INSTALLING LICENSED ELECTRICIAN……..…

……..……

LICENCE No……..……

ATTACH PROOF OF PURCHASE HERE

THIS COMPLETED DETAIL PAGE SHOULD BE PRODUCED AND SENT TO THE WHOLESALER OR THEIR AUTHORISED AGENTS BEFORE OBTAINING WARRANTY SERVICE

This fan is suitable for indoor use only.